Gomolzig Flugzeug und Maschinenbau, GmbH

Piston Engine Aircraft Exhaust Silencer Systems

GENERAL AVIATION AIRCRAFT NOISE AND SILENCER OPTIONS INFORMATION SHEET

BACKGROUND

Gomolzig was founded in 1952 as an aircraft maintenance facility and exhaust system developer and manufacturer. This work evolved into other components in general aviation aircraft including landing gears, power plants, and others, but their main focus continued to remain with in-depth work on exhaust systems.

Gomolzig began its work on engine exhaust-noise silencers for general aviation aircraft in the early 1970's. At the time, there were several complaints about glider towing aircraft noise came up at its home airfield. To avoid unwanted consequences to the airfield, it was decided that noise emissions had to be significantly reduced. Gomolzig silencers helped resolve noise related problems at their airfield. This has since evolved into over 3000 aircraft installations at numerous airfields throughout Europe.

Many airfields, regardless of country, often face a great deal of pressure, and receive numerous complaints from local residents and authorities about aircraft noise. These all influence the survivability of the airfields, and the flexibility pilots have when operating in and out of airports. Noise reduction must be a high priority to mitigate these noise related problems.

PRIMARY SOURCES OF NOISE

There are two primary sources of noise emanating from piston engine powered general aviation aircraft, without taking into consideration airframe related issues (fuselage, etc.): the propeller and the engine exhaust.

Noise Profile: 55% Power Setting w/o Silencer

Noise Profile: 55% Power Setting <u>with</u> Silencer

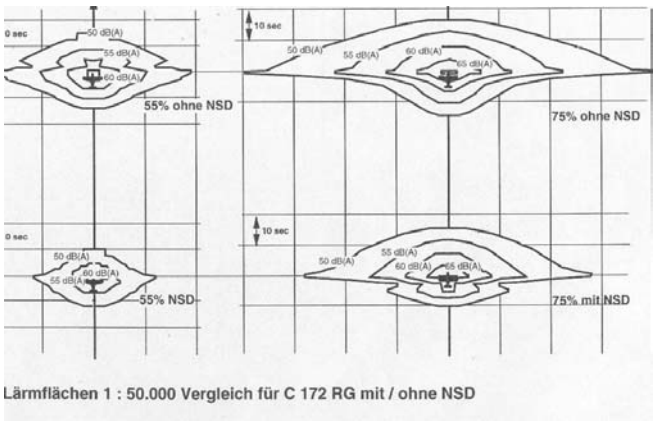

Noise Profile: 75% Power Setting w/o Silencer

Noise Profile: 75% Power Setting <u>with</u> Silencer

Figure 1: Influence on Noise from Power Settings and Silencers

The propeller produces eye shaped noise-waves, as shown in figure 1. The intensity of this noise is a direct function of propeller tip speed (the higher the power setting/propeller rpm, the higher the propeller tip speed). This is especially intensified when the tip speed approaches sonic conditions. The pilot has the ability to influence propeller noise levels, by adjusting the propeller speed during climb and cruise. It's not uncommon to operate at higher propeller speeds than necessary to effectively operate an aircraft. However, it's understandable to operate at high propeller speed levels and insure that no concern about available power exists. Figure 1 also illustrates the difference in the propeller noise profile due to reduced power setting/propeller rpm.

The information contained in this document is proprietary to Gomolzig and those that are provided copies by Gomolzig or its authorized representatives. This document shall not be distributed to other parties without the prior written permission by Gomolzig or its authorized representatives.

To minimize propeller noise, it's also possible to use lower noise with options such as multi-blade and/or variable pitch propellers. However, these options are relatively expensive and increase aircraft operating complexity.

Engine exhaust noise is the second predominant source of noise that can be controlled/reduced.

A general misconception is that propeller noise is so predominant that reducing noise in other areas does not produce significant results. This is not the case.

Figure 2 illustrates how noise from an over-flying aircraft is heard by observers on the ground in the timeframe beginning with 25 seconds before and up to 25 seconds after the aircraft has flown over, and the influence from the propeller and exhaust system silencers.

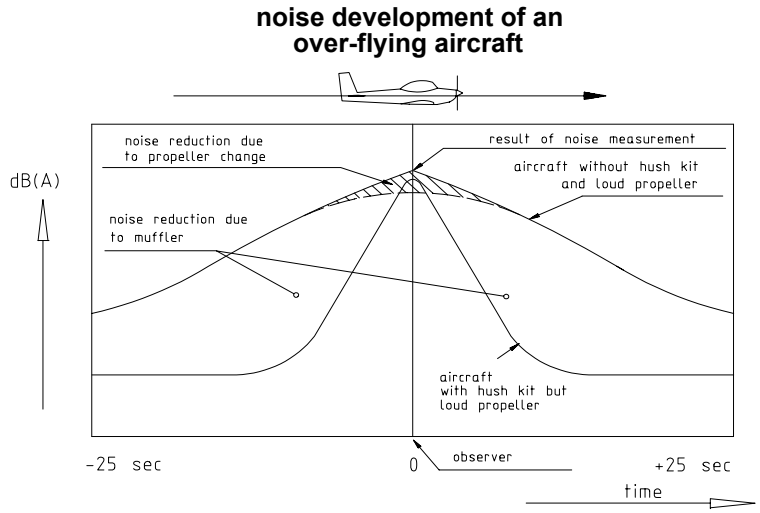

Figure 2: Noise from and over-flying aircraft as heard by observers on the ground

This figure illustrates that a propeller change by itself has little influence on noise heard by people on the ground, and that the biggest influence is due to the addition of silencers systems. Noise from an over-flying aircraft is heard much later as it's approaching, and is not heard much sooner after it has flown by.

This should significantly reduce complaints by the public to airfields, etc.

The best case is a combination of reduced propeller noise and the addition of an engine exhaust silencer system, as shown in Figures 3 and 4.

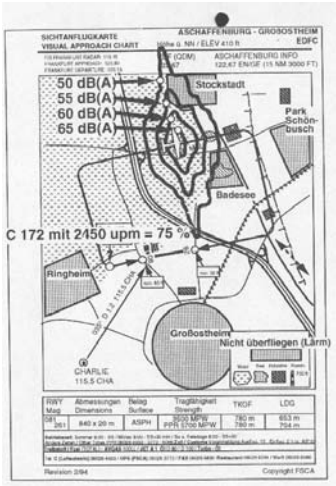

Figure 3: Noise Profile of Cessna 172 RG with fixed pitch propeller in a standard traffic circuit at a German airfield, operating at 2450 RPM and with original exhaust system. The gray shaded circles belong to some highly noise sensitive areas that cannot be flown over.

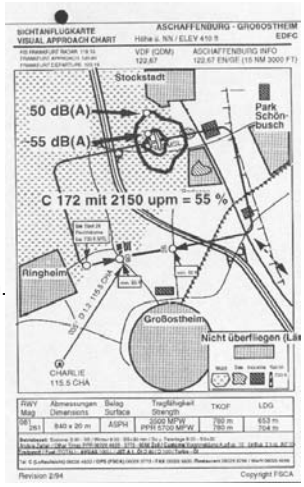

Figure 4: Noise Profile of the same C 172 RG, but operating at 2150 RPM, and the addition of a Gomolzig silencer. As shown, the noise profile is much smaller, allowing much greater flexibility with regard to flying patterns, and reduced risk of public complaints about Aircraft noise.

In addition to the above, an indirect benefit of Gomolzig engine exhaust silencers are reduced cabin noise. These resultant changes in engine exhaust frequency and intensity improve the comfort levels inside the aircraft for the pilots and their passengers.

The information contained in this document is proprietary to Gomolzig and those that are provided copies by Gomolzig or its authorized representatives. This document shall not be distributed to other parties without the prior written permission by Gomolzig or its authorized representatives.

GOMOLZIG SILENCER SYSTEMS

Gomolzig silencers operate based on the combination of two principles to achieve noise reduction over the entire operating range of an aircraft (taxiing, take-offs & landings, and cruising): Reflection and Absorption. These principles operate in combination to reduce noise over the operating frequencies and pressures seen in engine exhaust, and each offers its own benefits depending on engine operating mode.

Gomolzig silencers are developed to insure the best possible exhaust system performance. Gomolzig "QUIETFLIGHT" silencers normally result in more balanced exhaust systems than most original exhausts, due to an improvement in exhaust gas flow. As a result, effects in exhaust backpressures and aircraft performance are within the normal operating specifications of the aircraft, and always within the requirements of FAR 23. Influences in aircraft performance are always seen, due to a variety of reasons, including engine performance, weather, and instrumentation tolerances. Gomolzig silencers fall within these tolerances.

To confirm aircraft performance, climbing tests up to 9000 feet are conducted during every new silencer system application.

All Gomolzig silencers and exhaust system components are made of high quality stainless steel to insure long life, and trouble-free operation. Silencer maintenance procedures are simple and easily integrated into regularly scheduled aircraft procedures.

GOMOLZIG SILENCER INSTALLATION OPTIONS

The following describes general installation options available from Gomolzig:

<u>Add-On Under-the-Fuselage Silencer Systems</u>

A standard silencer, the specific type based on engine used, is added to the original exhaust system. This is an inexpensive and effective solution. Other components, such as new mufflers, etc., are available to optimize original exhaust system performance. Under-the-Fuselage systems provide up to 10 dB(A) reductions in engine exhaust noise.

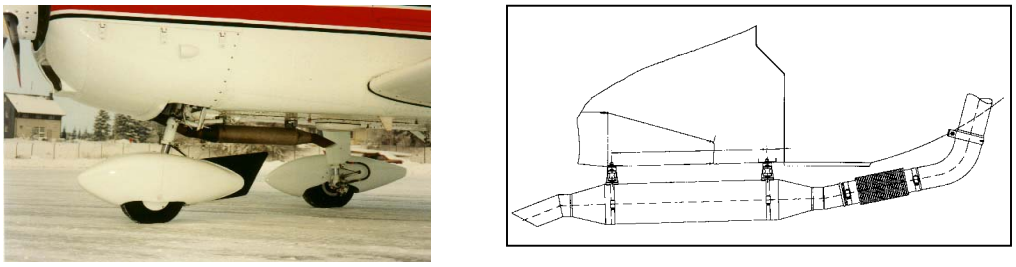

Figure 5: Under-the-Fuselage Silencer System, Modified Tailpipe Connection

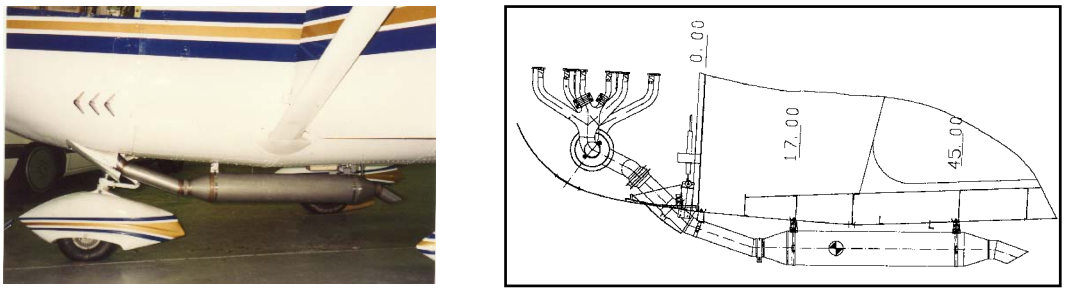

Figure 6: Under-the-Fuselage Silencer System, In-Cowl Connection

The information contained in this document is proprietary to Gomolzig and those that are provided copies by Gomolzig or its authorized representatives. This document shall not be distributed to other parties without the prior written permission by Gomolzig or its authorized representatives.

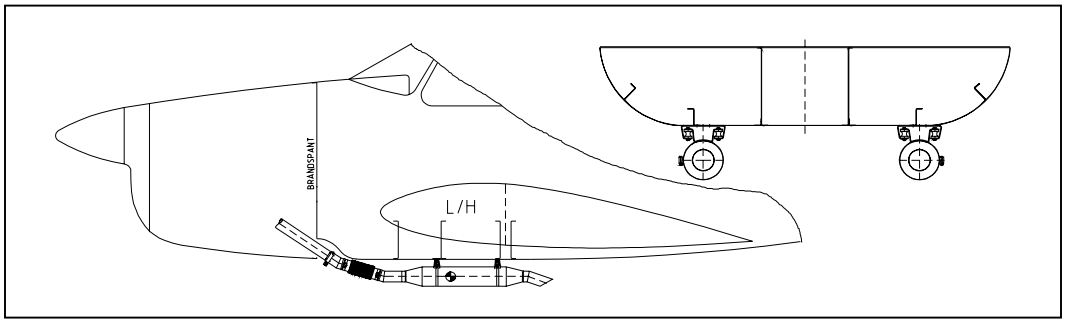

Figure 7: Under-the-Fuselage Silencer System, Dual-Tailpipe

In-Cowl Silencer Systems

In-Cowl silencers offer the benefit of being invisible from the outside of the aircraft. However, since these systems are aircraft specific influenced by packaging room inside the cowling area, very few off-the-shelf components are possible. As a result, these are more expensive options than the under-the-fuselage systems. Generally, in addition to a new silencer, these systems replace the original exhaust systems.

These systems offer noise reductions of 7 to 10 dB(A).

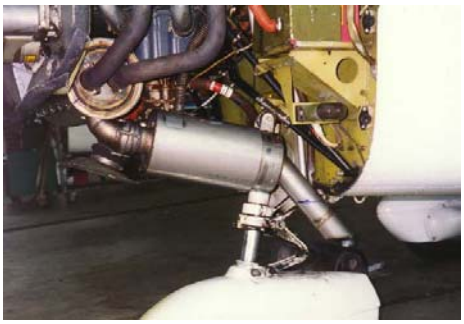

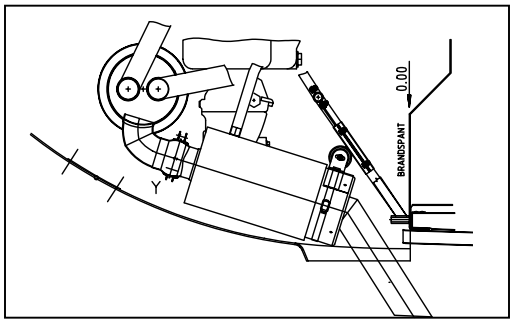

Figure 8: In-Cowl Silencer System

Ceramic Silencer Systems

A new, patent pending, technology undergoing final development to reduce noise. The proprietary ceramic slices provide optimized exhaust gas flow, and gives reflection and absorption properties in one unit.

This patent pending technology was first applied with the new Cessna T206H. An aircraft noise reduction on 5 dB(A) was reached, based on ICAO Chapter X measurements.

Other tests resulted in engine exhaust noise reduction of up to 11 dB(A).

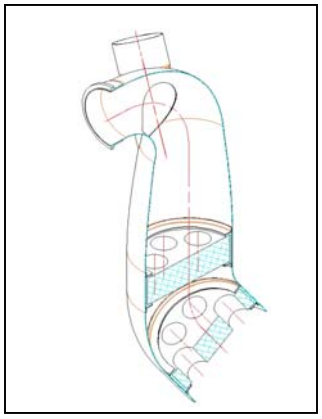

Figure 9: Ceramic Silencer

CONTACTS:
Gomolzig Flugzeug und Maschinenbau
Hattinger Strasse 10, Gebaude 38
Schwelm 58332
Germany
Tel +49 2336 490 330
Fax +49 2336 490 339
E-mail: info@gomolzig.com
www.gomolzig.com

North American Representative:
Nick Jaksa & Associates
810 Loggers Circle
Rochester, MI
48307 USA
Tel 1 248 652 3980
Fax 1 248 651 3677
E-mail: nick.jaksa@gomolzig.com
www.gomolzig.com

The information contained in this document is proprietary to Gomolzig and those that are provided copies by Gomolzig or its authorized representatives. This document shall not be distributed to other parties without the prior written permission by Gomolzig or its authorized representatives.